UTR Double Wing

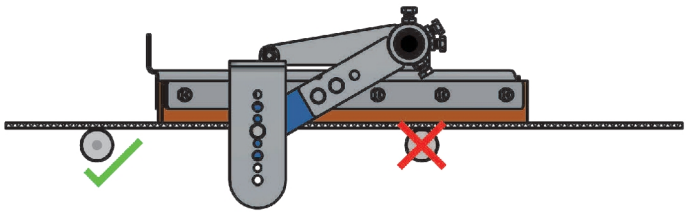



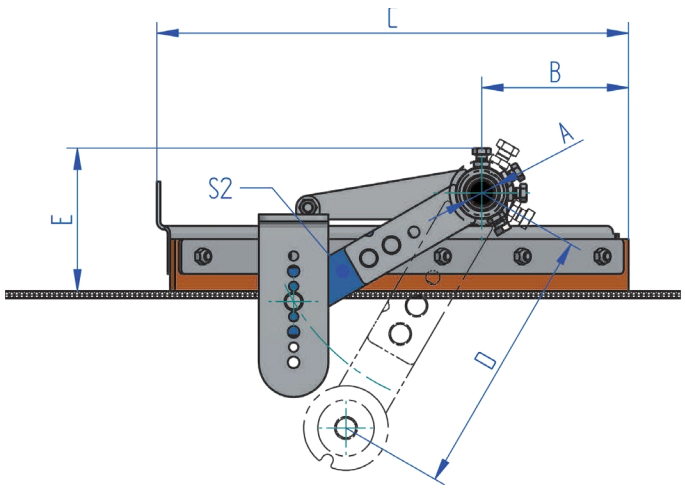



X	S2	A	B	C	D	E	Z
500 mm				295 mm			800 mm
650 mm				370 mm			1000 mm
800 mm				445 mm			1100 mm
1000 mm	SE-27	Ø38	170 mm	545 mm	250 mm	165 mm	1300 mm
1200 mm				645 mm			1500 mm
1400 mm				745 mm			1700 mm